SELF-ALIGNING DENTAL IMPLANT ASSEMBLY

FIELD OF THE INVENTION

[0001] The present invention relates generally to dental implants and, more specifically, to dental implant systems adapted to self-align. This invention may be adapted for use in other body parts where there is need to secure an appliance to the skeletal system or bone.

BACKGROUND OF THE INVENTION

[0002] One common problem in humans is tooth loss as a consequence of tooth decay or periodontal disease. It provokes a need to replace the lost tooth or teeth with at least one type of denture. The denture type may be selected from tissue-supported full or partial prostheses, teeth-supported partial prostheses and implant supported full or partial prostheses). Sometimes clinical, mechanical and esthetic considerations do not allow for the replacement of the absent teeth via dentures, but required the insertion of one or dental implants.

[0003] After a tooth extraction a bony socket is formed. The socket heals via remodeling of the jaw bone and reparation repair of the defect. As a rule, the repair process does not restore the initial height and width of the bone. Typically, a toothless alveolar ridge "shrinks" to about two thirds of its original volume. In some conditions, such as multiple extractions, advanced patient age or systemic disorder, this three-dimensional atrophy of the alveolar ridge may be very striking. Ultimately a significant distortion of anatomical relationships of the ridges occurs. A dental implant insertion path, its final localization and, as a consequence, the crown's orientation, are obliged by the bone presence, its amount and density (by the amount and density of the bone). There is a familiar clinical situation, when an implant supported fixed prosthesis does not meet functional and esthetic demands due to poor localization of the abutments in regard (relation) to facial and oral soft tissues. Several attempts have been made to overcome these drawbacks when providing dental implantation.

[0004] Some implants known in the art comprise round threaded bone fixtures. These fixtures are configured such that most or all of the load moment from the implant impacts directly on the bone. The end of the round stem is threaded, the round stem typically being made of titanium, which is screwed directly into alveolar bone.

However, it should be noted that bone has non-uniform different density which changes over time. As the patient ages, the bone becomes more brittle, which induces misalignment with the original contact point of the tooth. Most implantations of implants in elderly patients require at least two surgical procedures/operations sometimes three operations over 4 or more months, which require the surgeon to operate upside down and accurately pick the exact spot and angle for the implant (a near to impossible task). Thus, misalignment of the installed implant is most often the rule, not the exception to the rule. This misalignment contributes to premature failure of the implant and subjects the patient to additional operations at an even more advanced age.

[0005] Matriculation of food for nourishment is not taken for granted in an aging population with periodontal problems. In some cases food must be crushed for juices as the elderly have reduced capacity to chew and ingest.

[0006] Threaded dental implants have been designed for a variety of functions such as collecting the bone chips that are produced by the self tapping installation. Mathematical analysis of the distal end and proximal end of the tapping thread found in US 5,897,319 only add to the complexity and impossibility of accurate implant placement.

[0007] Installation of self tapping screws often miss their intended target since the surgeon is frequently working confined to a small area upside down and backwards on an angle. Self tapping can cause overheating and damage to bone cells a condition called osteoblast. Also, over torque of self tapping screws can cause bone to die a condition called osteonecrosis. Present state of the art appears to have as a goal 100% rotation free which ignores the inherent forces at work to oppose this.

[0008] The present invention recognizes this and seeks to avoid these and other issues in the current state of the art. Some additional relevant patent publications in the field include US 4,109,976, US 5,195,891, US 7,291,012 and US 7,264,470.

[0009] There is thus still a need to provide versatile dental implants which overcome the problems caused by some or all of the aforementioned phenomena.

SUMMARY OF THE INVENTION

[0010] It is an object of some aspects of the present invention to provide improved dental implant systems and methods.

[0011] In preferred embodiments of the present invention, improved methods and assemblies are provided for self-aligning dental implants.

[0012] In other preferred embodiments of the present invention, a method and system is described for providing improved self-aligning dental implants.

[0013] Advantageously, the implants of the present invention are configured to be inserted into the mouth of a patient in one surgical procedure.

[0014] Additionally, the implants of the present invention are made from a variety of metals and ceramics representing a cost saving over titanium and the delay in waiting for osseintegration to secure the implant.

[0015] There is thus provided according to an embodiment of the present invention, a dental implant assembly comprising:

a) self-aligning dental implant receiving element adapted to be introduced into a hole formed in alveolar bone in a jaw of a patient, the receiving element comprising a drilled out section;

b) a one-piece implant comprising:

i. an implant apical stem fixture to be implanted into the drilled-out section;

ii. an occlusal end comprising an outer tooth crown; and

iii. a connecting region connecting said implant apical stem fixture and the occlusal end, the connecting region comprising an outer screw thread; and

c) a nut element comprising a hollow bore comprising an inner thread adapted to coaxially receive the outer screw thread of the one-piece implant thereby configured to absorb impact and misaligned loads of the one-piece implant.

[0016] In one embodiment, the hole is slightly larger in diameter with the dental implant housing assembly.

[0017] Also provided are methods for affixing the dental implant assembly in a mouth of a patient, the method including, in one surgical procedure:

a) bonding a self-aligning bushing receiving element in a hole in alveolar bone;

b) mounting a nut element into a position on and coaxial to the one-piece implant; and

c) introducing the one-piece implant through the nut element into the receiving element so as to firmly affix the one-piece implant in the receiving element such that the outer tooth crown is aligned with adjacent teeth or prostheses.

[0018] The method also provides for aligning the one-piece implant with an opposing opposite tooth in the introducing step.

[0019] The present invention will be more fully understood from the following detailed description of the preferred embodiments thereof, taken together with the drawings.

BRIEF DESCRIPTION OF THE DRAWINGS

[0020] The invention will now be described in connection with certain preferred embodiments with reference to the following illustrative figures so that it may be more fully understood.

[0021] With specific reference now to the figures in detail, it is stressed that the particulars shown are by way of example and for purposes of illustrative discussion of the preferred embodiments of the present invention only and are presented in the cause of providing what is believed to be the most useful and readily understood description of the principles and conceptual aspects of the invention. In this regard, no attempt is made to show structural details of the invention in more detail than is necessary for a fundamental understanding of the invention, the description taken with the drawings making apparent to those skilled in the art how the several forms of the invention may be embodied in practice.

[0022] In the drawings:

[0023] Fig. 1A is a simplified schematic illustration of a vertical cross section of an unassembled self-aligning dental implant assembly, in accordance with an embodiment of the present invention;

[0024] Fig. 1B is a simplified schematic illustration of vertical cross section of an assembled self-aligning dental implant assembly, in accordance with an embodiment of the present invention;

[0025] Fig. 2 is a vertical cross section of a self-aligning dental implant receiving element for receiving a one piece implant, in accordance with an embodiment of the present invention;

[0026] Fig. 3 is a vertical cross section of a dental implant housing in the implant receiving element of Fig. 8A, in accordance with an embodiment of the present invention;

[0027] Fig. 4 is a vertical cross section of a self-aligning bushing in the implant receiving element of Fig. 8A, in accordance with an embodiment of the present invention;

[0028] Fig. 5 is a vertical cross section of a casing of the implant receiving element of Fig. 8A, in accordance with an embodiment of the present invention;

[0029] Fig. 6 is a self-aligning bushing with a non-round bore of the implant receiving element of Fig. 8A, in accordance with an embodiment of the present invention;

[0030] Fig. 7 is a self-aligning bushing with a straight tapered bore, of the implant receiving element of Fig. 8A, in accordance with an embodiment of the present invention;

[0031] Fig. 8A is a simplified schematic illustration of a vertical cross section of a partially assembled self-aligning dental implant assembly, in accordance with an embodiment of the present invention; and

[0032] Fig. 8B is a simplified schematic illustration of vertical cross section of an assembled self-aligning dental implant assembly, in accordance with an embodiment of the present invention.

[0033] In all the figures similar reference numerals identify similar parts.

DETAILED DESCRIPTION OF PREFERRED EMBODIMENTS

[0034] In the detailed description, numerous specific details are set forth in order to provide a thorough understanding of the invention. However, it will be understood by those skilled in the art that these are specific embodiments and that the present invention may be practiced also in different ways that embody the characterizing features of the invention as described and claimed herein.

[0035] Reference is now made to Fig. 1A, which is a simplified schematic illustration of a vertical cross section of an unassembled self-aligning dental implant assembly 100, in accordance with an embodiment of the present invention.

[0036] The implant assemblies 100 (Fig. 1A), 800 (Fig. 8A) of the present invention may be made out of titanium, metal alloys, ceramic materials such as Zirconia, Ti-6Al-4V alloy, stainless steel and combinations thereof. The implant assemblies may

also be coated or sprayed over some or all of the outer surface thereof, such as by hydroxy-apatite.

[0037] Unassembled self-aligning dental implant assembly 100 comprises three parts;

a) self-aligning dental implant receiving element 150 adapted to be introduced into a hole 133 slightly larger and geometrically symmetric formed in alveolar bone 141 in a jaw (not shown) of a patient, the receiving element comprising a drilled out section 131 in a self-aligning bushing receiving element 138;

b) a one-piece implant 110 comprising:

i. an implant apical stem fixture 118 to be inserted into the drilled-out threaded section 131 in the self-aligning dental implant receiving element;

ii. an occlusal end 114 comprising an outer tooth crown 112; and

iii. a threaded connecting region 116 connecting an implant apical stem fixture 118 and an occlusal end 114, the connecting region comprising an outer screw thread 117; and

c) a nut element 120 comprising a hollow bore 124 comprising an inner thread 139 adapted to coaxially receive the outer screw thread 117 of the one-piece implant thereby configured to deflect impact and misaligned loads of the one-piece implant.

[0038] The nut element is constructed and configured to keep original point contact with the opposing tooth for reduced wear and stress on the implant.

[0039] The self-aligning dental implant receiving element 150 is adapted to be inserted into hole 133 in the jaw. The receiving element 150 may, according to some embodiments, be cemented into the hole with an adhesive or cement 130. Additionally or alternatively the implant receiving element 150 may be introduced under force without adhesive into hole 133.

[0040] Further details of self-aligning dental implant receiving element 150 are described with reference to Figs. 3-7 herein below.

[0041] According to further embodiments, the implant apical stem fixture 118 may be cylindrical with a tapered end 113. According to other embodiments, the implant apical stem fixture 118 may be tapered and narrowing upon approaching tapered end 113.

[0042] The diameter or cross-section of implant apical stem fixture 118 is often approximately half that of hole 136. In some cases the ratio of the diameter of the fixture to the hole may be greater than 0.5.

[0043] In some cases the ratio of the diameter of the fixture to the hole may be less than 0.5.

[0044] In some cases, the apical stem fixture 118 comprises a stem 115 having a cross-section selected from the group consisting of round, oval, square, rectangular and multi-sided.

[0045] In some other cases, the apical stem fixture comprises a plurality of longitudinal flanges 101 (not shown) configured to securely locate the stem into said self-aligning dental implant receiving element 150.

[0046] A hole 133 formed in the jaw may be of a substantially square cross section, or alternatively of a substantially round cross section. In some embodiments, the apical stem fixture 118 is configured to be cemented into the self-aligning dental implant receiving element 150. Additionally or alternatively the apical stem fixture may have no threads and may be snap-fitted, clasped, close-fitted, or fitted by any other means known in the art into the self-aligning dental implant receiving element 150.

[0047] Additionally or alternatively, self-aligning dental implant receiving element 150 may be snap-fitted, clasped, close-fitted, or fitted by any other means known in the art into the jaw of the patient.

[0048] Dental implant assembly 110 may be made of a number of materials. According to some embodiments the stem fixture comprises at least one non-titanium material. According to some embodiments, the at least one non-titanium material comprises at least one non-titanium metal. In some cases, the stem fixture consists of stainless steel.

[0049] Advantageously, the self-aligning dental implant assemblies of the present invention allow for easy insertion by the dental practitioner with reduced or eliminated need for osseintegration, since these assemblies have a designed mechanism for movement which is acknowledged to occur in present state of the implant art, which focuses on minimizing movement which occurs despite the best efforts of the dental practitioner. Current prior art implants sustain loads unlike a healthy tooth which uses a periodontal ligament to absorb shock loading in response to vertical and horizontal forces. Loads from a variety of sources, food matriculation,

teeth grinding at night, bruxism tooth clenching and external daily activities such as contact sports all the aforementioned invariably create misalignment and peak loads.

[0050] The nut element 120 typically has a hexagonal outer cross section 121 (not shown) and a substantially circular inner cross section 126 (not shown).

[0051] Reference is now made to Fig. 1B, which is a simplified schematic illustration of vertical cross section of an assembled self-aligning dental implant assembly 150, in accordance with a preferred embodiment of the present invention.

[0052] As can be seen in Fig. 1B, in some cases the dental implant assembly 110 has a cut-out section 119 in the connecting region 116. The nut element 120 may be conveniently mounted on the cut-out section 119, prior to introducing the implant assembly 110 into the patient's mouth.

[0053] Fig. 2 shows a vertical cross section 200 of self-aligning dental implant receiving element 150 for receiving a straight tapered self-aligning dental implant assembly (not shown) similar to 110, in accordance with an embodiment of the present invention.

[0054] Dental implant receiving element 150 comprises a spherical bushing 206 having a centered vertical a tapered hole 202 drilled in the bushing 206. The bushing may be made in a number of different shapes. The bushing 206, similar or identical to bushing element 138 (Fig. 1A) may, according to some embodiments, have a spherical cross-section or elliptical cross section. The bushing may be made of any suitable material of a hardness of less than that of the material of a implant casing 134.

[0055] Self-aligning dental implant receiving element 150 comprises a dental implant housing 132. The implant housing contains a cut-out 136 to allow for the rotation of the spherical self-aligning bushing receiving element 138, which transmits loads from dental implant assembly 110. Also, in some embodiments this area houses a retaining ring or seal 302, 402 to keep the bushing horizontal and in original alignment 832.

[0056] Housed within the dental implant housing is an implant casing 134 of hardness greater than that of material 204 (similar or identical of self-aligning bushing receiving element 138 (Fig. 1A) or 206 (Fig. 2).

[0057] Another example of an implant assembly 800 of the present invention is shown in Figs. 8A and 8B herein below.

[0058] Fig. 3 is a vertical cross section of a dental implant housing 300 in the implant receiving element 830 of Fig. 8A, in accordance with an embodiment of the present invention.

[0059] Implant housing 300 comprises a groove 302, typically a concentric circular groove for receiving a circular ring seal 303 (not shown). The ring seal is circular and snaps into groove 302.

[0060] A cylindrical hole 304 is disposed in the housing to press Fig. 5 (500) pre assembled.

[0061] In one embodiment, there is a clearance 306 for the self aligning bushing axial movement, similar to 136 (Fig. 1A).

[0062] Fig. 4 is a vertical cross section of a self-aligning bushing 400 in the implant receiving element 830 of Fig. 8A, in accordance with an embodiment of the present invention.

[0063] According to this embodiment, the self-aligning bushing 400 comprises at least one groove 402, constructed and configured to receive a retainer seal. The movable bushing is made of a soft material (relative to the casing so that any wear is distributed over the moving part spherical outside diameter), such as bronze, meehanite or composite. The bushing is adapted for distribution of wear on an outer diameter 404 or surface area 440 thereof. The bushing comprises a vertically symmetrical cut-out section 431, which may be round, or square, for example.

[0064] Fig. 5 is a vertical cross section of a casing 500 of the implant receiving element 830 of Fig. 8A, in accordance with an embodiment of the present invention.

[0065] Casing 500 for receiving self-aligning bushing 400 (of Fig. 4, for example) comprises a cut-out 502 having an internal diameter 504 matched to receive the self-aligning bushing 400 in a snug fit. Casing 500 is made of a material of a greater hardness than bushing 400. These materials include, 52100 bearing steel, stainless steel, Rockwell c scale 40 or harder, ceramic material.

[0066] Fig. 6 is a self-aligning bushing 600 with a non-round bore 602 of the implant receiving element 150 of Fig. 2, in accordance with an embodiment of the present invention. Non-round bore 602 may be square, hexagonal, petrie, polygonal or other, for example. Implant assembly 100 may be introduced into the non-round bore, both in cases wherein implant apical stem fixture 118 has a reuleaux or square cross section allowing for much more stability and higher resistance to axial movement.

[0067] According to some further embodiments, the an occlusal end 114 of one-piece implant 110 may be of a non round cross section, which offer more resistance to movement.

[0068] Fig. 7 is a self-aligning bushing 700 with a straight tapered bore 702, of the implant receiving element 830 of Fig. 8A, in accordance with an embodiment of the present invention. The dental implant 110 may be glued or cemented into the straight tapered bore using any suitable cement material, known in the art.

[0069] Also disclosed are methods for affixing the dental implant assembly in a mouth of a patient, the method comprising:

a) bonding the self-aligning dental implant receiving element 150 into a drilled out section 133 in alveolar bone 141;

b) mounting a nut element 120 into a position on and coaxial to the one-piece implant 110; and

c) introducing the one-piece implant through the nut element into the receiving element so as to firmly affix the one-piece implant in the receiving element such that the outer tooth crown 112 is aligned with adjacent teeth or prostheses (not shown).

[0070] According to alternative embodiments the one-piece implant may be snap-fitted, press fitted or fitted by any other means known in the art into the receiving element.

[0071] Reference is now made to Fig. 8A, which is a simplified schematic illustration of a vertical cross section of a partially assembled self-aligning dental implant assembly 800, in accordance with an embodiment of the present invention.

[0072] Self-aligning dental implant assembly 800 comprises a self-aligning dental implant receiving element 150. The implant assembly is similar to implant assembly of Fig. 1A, but a) may be of a different geometry and b) further comprises i) a circular ring seal 831 adapted to keep a self-aligning bushing 838 horizontal; and ii) one or more retainer elements 832 adapted to retain the circular ring seal in position.

[0073] Reference is now made to Fig. 8B, which is a simplified schematic illustration of vertical cross section of an assembled self-aligning dental implant assembly 850, in accordance with an embodiment of the present invention.

[0074] The implants of the present invention may be introduced into a patient in one surgical procedure, comprising the following steps:

a) a drilled-out section 144 is drilled in the jaw 141 of a patient slightly larger and symmetrical to the diameter of the dental implant assembly 150;

b) self-aligning dental implant receiving element 150 is inserted cemented using adhesive 130 or cement 130 into the drilled out section;

c) one-piece implant 810 comprising nut element 820 mounted thereon placed on an undercut 819 of connecting region 816, is inserted into self-aligning dental implant receiving element 830 in bushing 838; and

d) the nut 120 is tightened to align the implant a) with the bushing and b) with an opposing tooth or prosthesis on the opposite jaw (not shown). This action may be checked using blue paper to identify any misalignment, as is known in the art.

[0075] The references cited herein teach many principles that are applicable to the present invention. Therefore the full contents of these publications are incorporated by reference herein where appropriate for teachings of additional or alternative details, features and/or technical background.

[0076] It is to be understood that the invention is not limited in its application to the details set forth in the description contained herein or illustrated in the drawings. The invention is capable of other embodiments for other than dental applications and of being practiced and carried out in various ways. Those skilled in the art will readily appreciate that various modifications and changes can be applied to the embodiments of the invention as hereinbefore described without departing from its scope, defined in and by the appended claims.

CLAIMS

1. A dental implant assembly comprising:

a) self-aligning dental implant receiving element adapted to be introduced into a hole formed in alveolar bone in a jaw of a patient, the receiving element comprising a drilled out section;

b) a one-piece implant comprising:

i. an implant apical stem fixture to be implanted into said drilled-out section;

ii. an occlusal end comprising an outer tooth crown; and

iii. a connecting region connecting said implant apical stem fixture and said occlusal end, the connecting region comprising an outer screw thread; and

c) a nut element comprising a hollow bore comprising an inner thread adapted to coaxially receive said outer screw thread of said one-piece implant thereby configured to absorb impact and misaligned loads of said one-piece implant.

2. A dental implant assembly according to claim 1, wherein said apical stem fixture comprises a stem having a cross-section selected from the group consisting of round, oval, square, rectangular and multi-sided.

3. A dental implant assembly according to claim 2, wherein said apical stem fixture comprises a plurality of longitudinal flanges configured to securely locate the stem into a self-aligning bushing receiving element made of bushing material in said self-aligning dental implant receiving element.

4. A dental implant assembly according to claim 3, wherein said self-aligning bushing receiving element is disposed in an implant casing.

5. A dental implant assembly according to claim 4, wherein said implant casing is housed in a dental implant housing.

6. A dental implant assembly according to claim 4, wherein said bushing material is retained in place by means of at least one of a retaining ring, a retainer seal and at least one retainer element.

7. A dental implant assembly according to claim 2, wherein said stem is tapered.

8. A dental implant assembly according to claim 1, wherein said hole is of a substantially square cross section.

9. A dental implant assembly according to claim 1, wherein said hole is of at least one of a substantially round cross section and a substantially elliptical cross section.

10. A dental implant assembly according to claim 1, wherein said apical stem fixture is configured to be cemented into said self-aligning dental implant receiving element.

11. A dental implant assembly according to claim 1, wherein said stem fixture comprises at least one non-titanium material.

12. A dental implant assembly according to claim 11, wherein said at least one non-titanium material comprises at least one non-titanium metal.

13. A dental implant assembly according to claim 10, wherein said stem fixture consists of stainless steel.

14. A dental implant assembly according to claim 1, wherein said nut element comprises an external hexagonal cross-section.

15. A dental implant assembly according to claim 1, wherein said bore is substantially circular.

16. A method for affixing the dental implant assembly according to claim 1 in a mouth of a patient, the method comprising:

a. bonding the self-aligning dental implant receiving element in a hole in alveolar bone;

b. mounting said nut element into a position on and coaxial to said one-piece implant; and

c. introducing said one-piece implant through said nut element into said receiving element so as to firmly affix said one-piece implant in said receiving element such that the outer tooth crown is aligned with adjacent teeth or prostheses.

17. A method according to claim 16, wherein said affixing step is performed in a one-day surgery.

18. The implant of claim 1, for non-dental uses.

19. The implant of claim 1, made of titanium.

20. The implant of claim 1, made of a non-titanium material.

21. A dental implant assembly according to claim 1, wherein said self-aligning dental implant receiving element comprises a drilled out section in a bushing material.

22. A dental implant assembly according to claim 1, wherein an outer surface of the self-aligning dental implant receiving element is tapered.

23. A dental implant assembly according to claim 1, wherein an outer surface of the self-aligning dental implant receiving element has a roughened surface to increase surface asperity.

24. An implant assembly, substantially as shown in the drawings, adapted for use in non-dental parts of the body wherein an additional appliance or device is to be connected to the skeletal system or bone via said implant assembly.

25. A dental implant assembly according to claim 3, wherein said occlusal end of said one piece implant is at least one of: non-round, square, elliptical, rectangular and tapered.

26. A dental implant assembly according to claim 25, wherein said one piece implant is configured to be snap-fitted, clasped, close-fitted or press fitted into said etc and snap into said self-aligning bushing receiving element.

ABSTRACT

The present invention provides dental implant assemblies comprising a self-aligning dental implant receiving element adapted to be introduced into a hole formed in alveolar bone in a jaw of a patient, the receiving element comprising a drilled out section; a one-piece implant comprising an implant apical stem fixture to be implanted into the drilled-out section of the receiving element; an occlusal end comprising an outer tooth crown; and a connecting region connecting the implant apical stem fixture and the occlusal end, the connecting region comprising an outer screw thread; and a nut element comprising a hollow bore comprising an inner thread adapted to coaxially receive the outer screw thread of the one-piece implant thereby configured to absorb impact and misaligned loads of the one-piece implant. The dental implant assembly may be adapted for any application in a mammalian body wherein an appliance needs to be affixed to the bone.

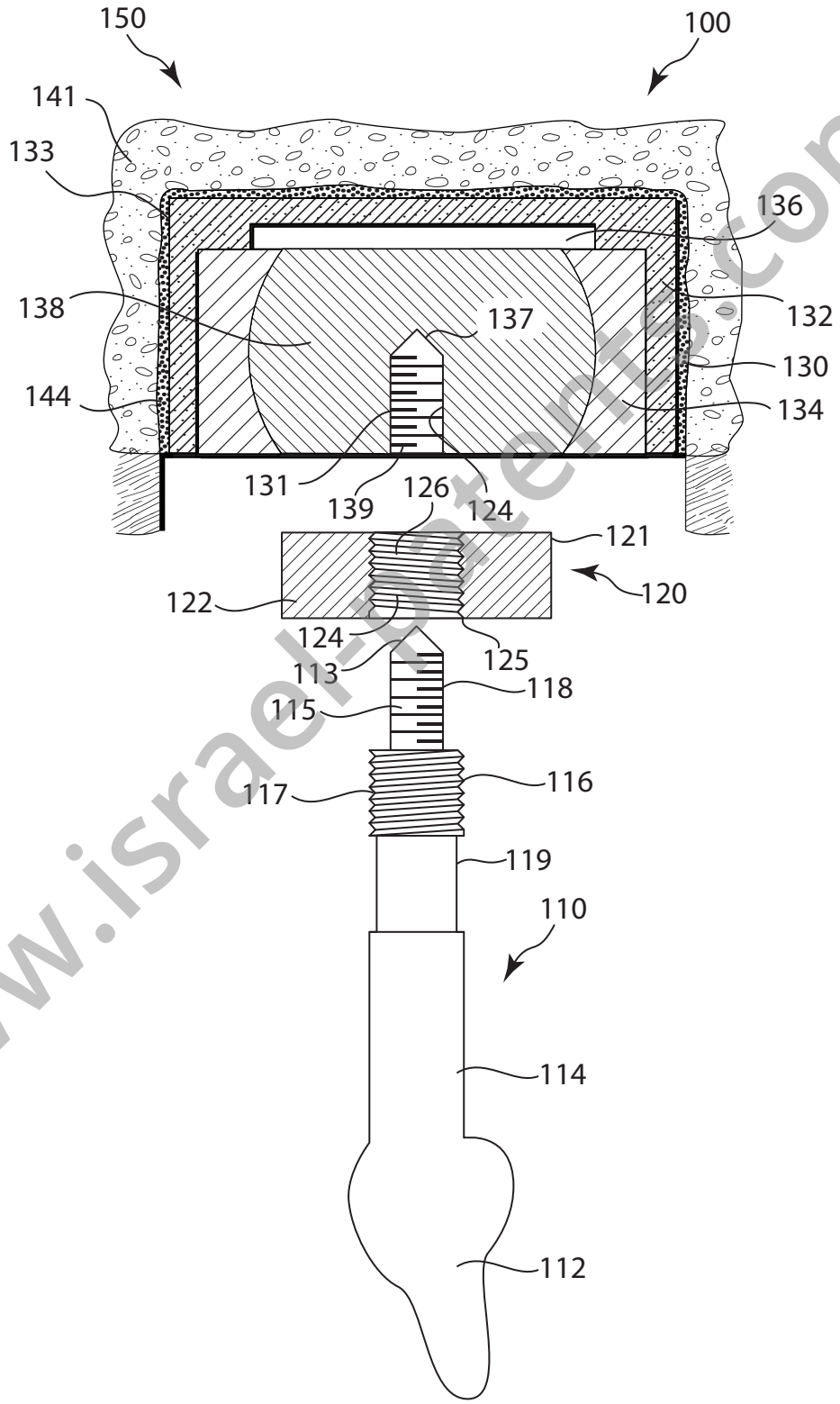

Fig. 1A

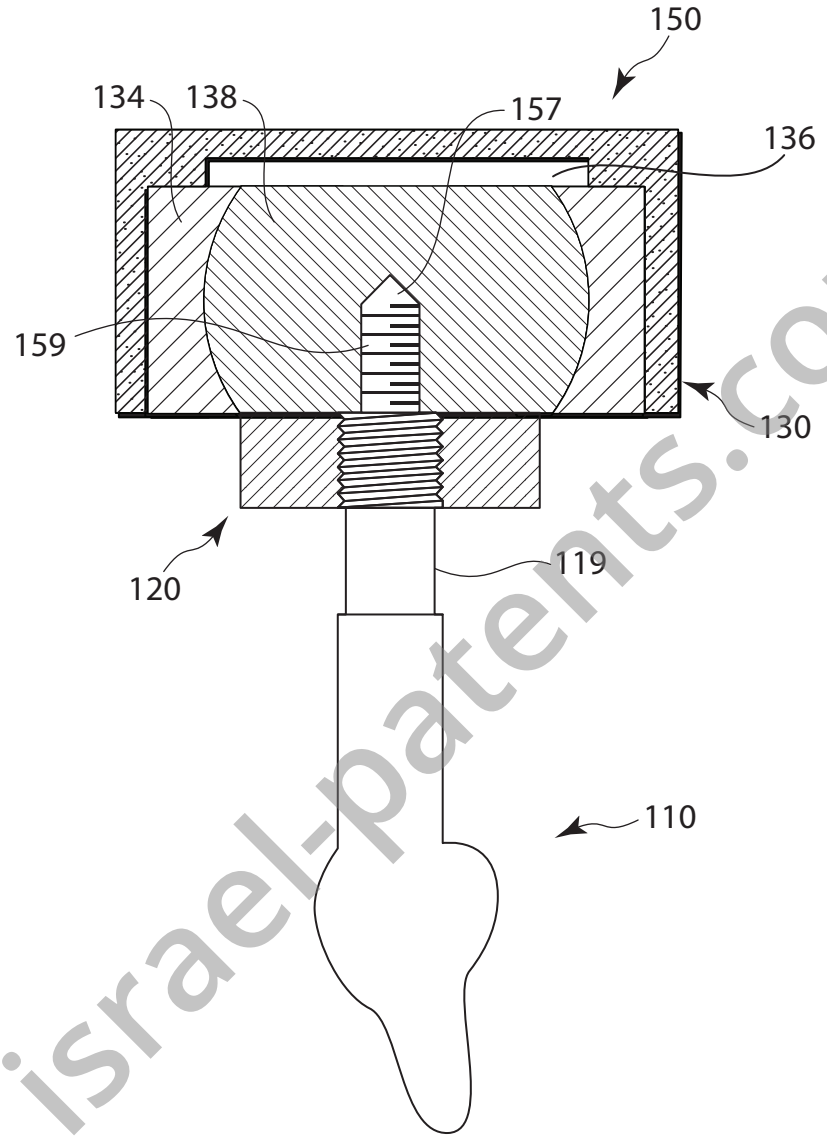

Fig. 1B

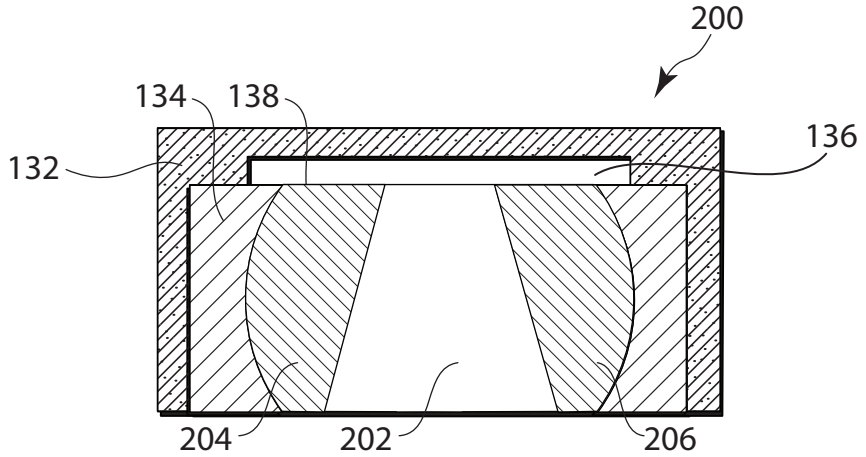

Fig. 2

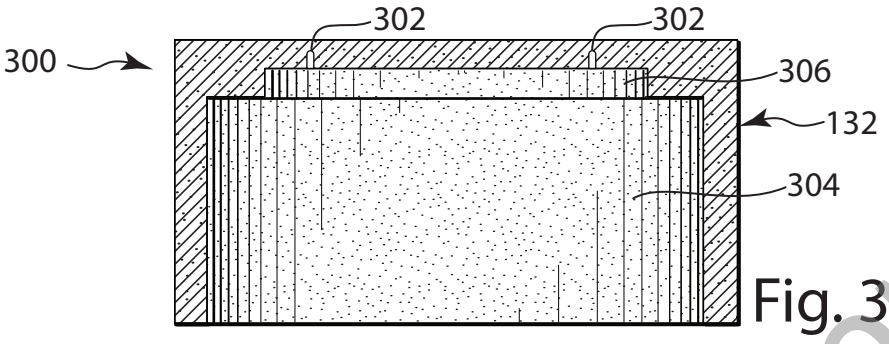

Fig. 3

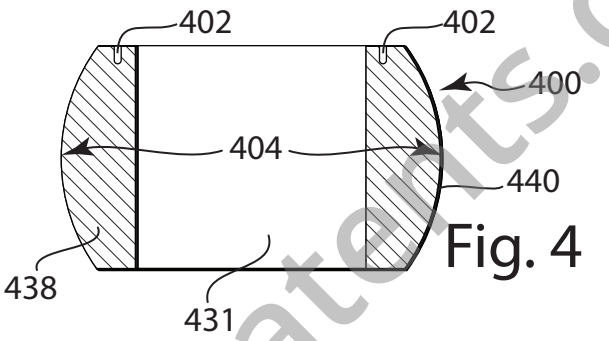

Fig. 4

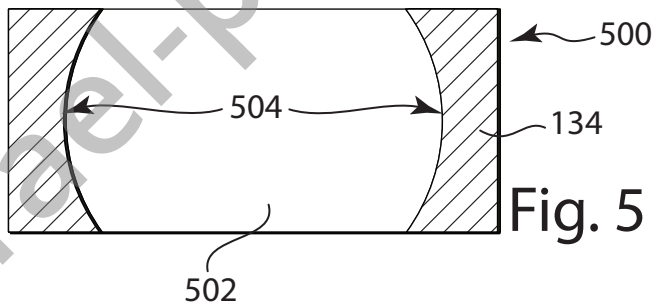

Fig. 5

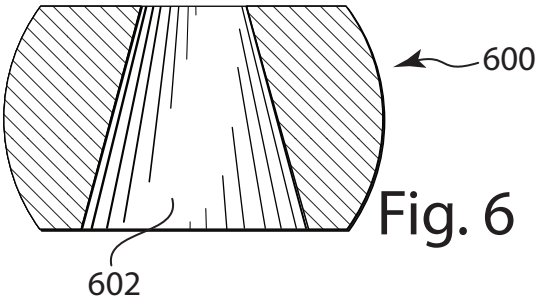

Fig. 6

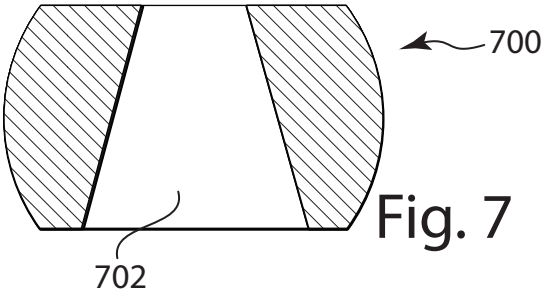

Fig. 7

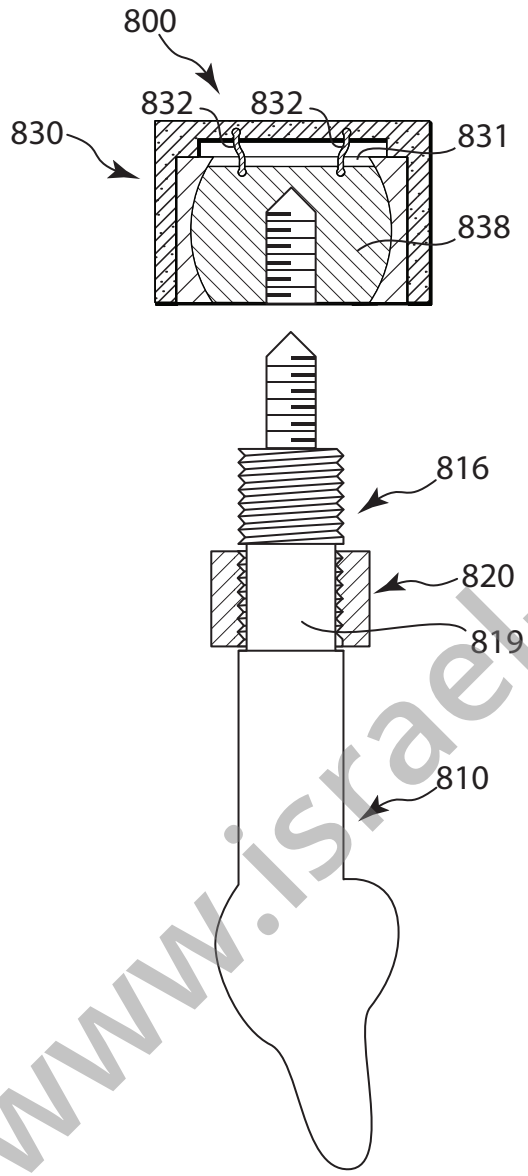

Fig. 8A

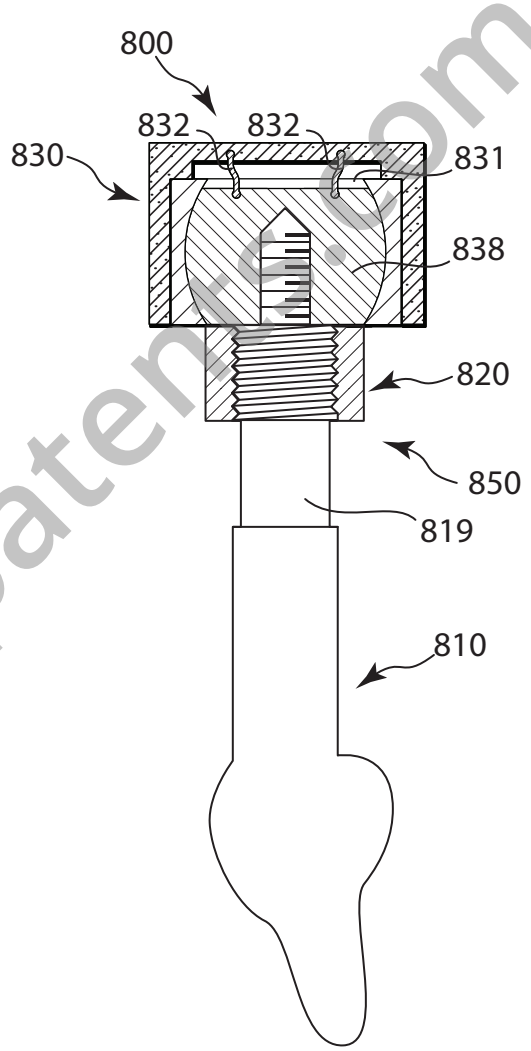

Fig. 8B